8.2 电源板

715G5508P01000002S

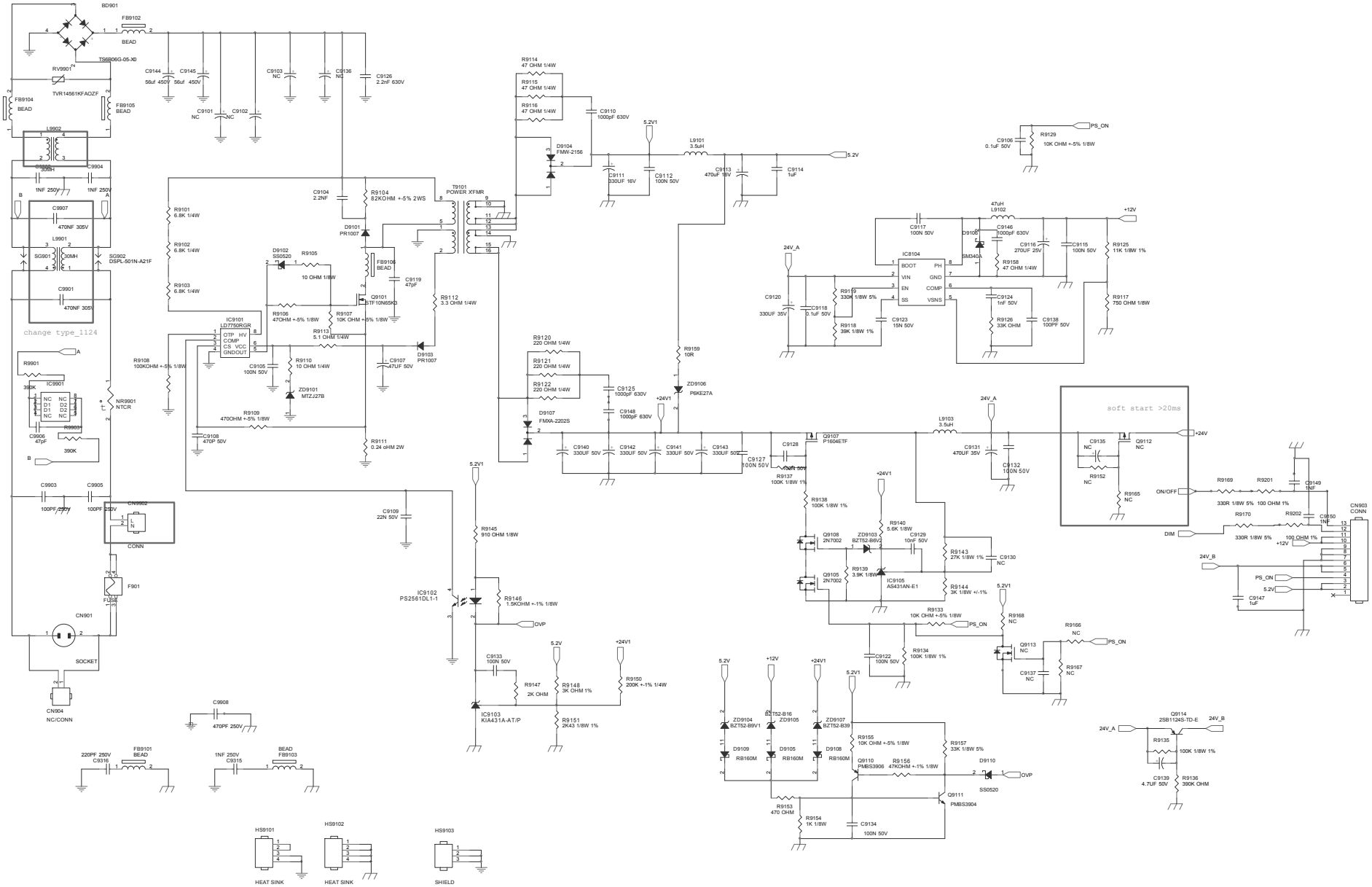

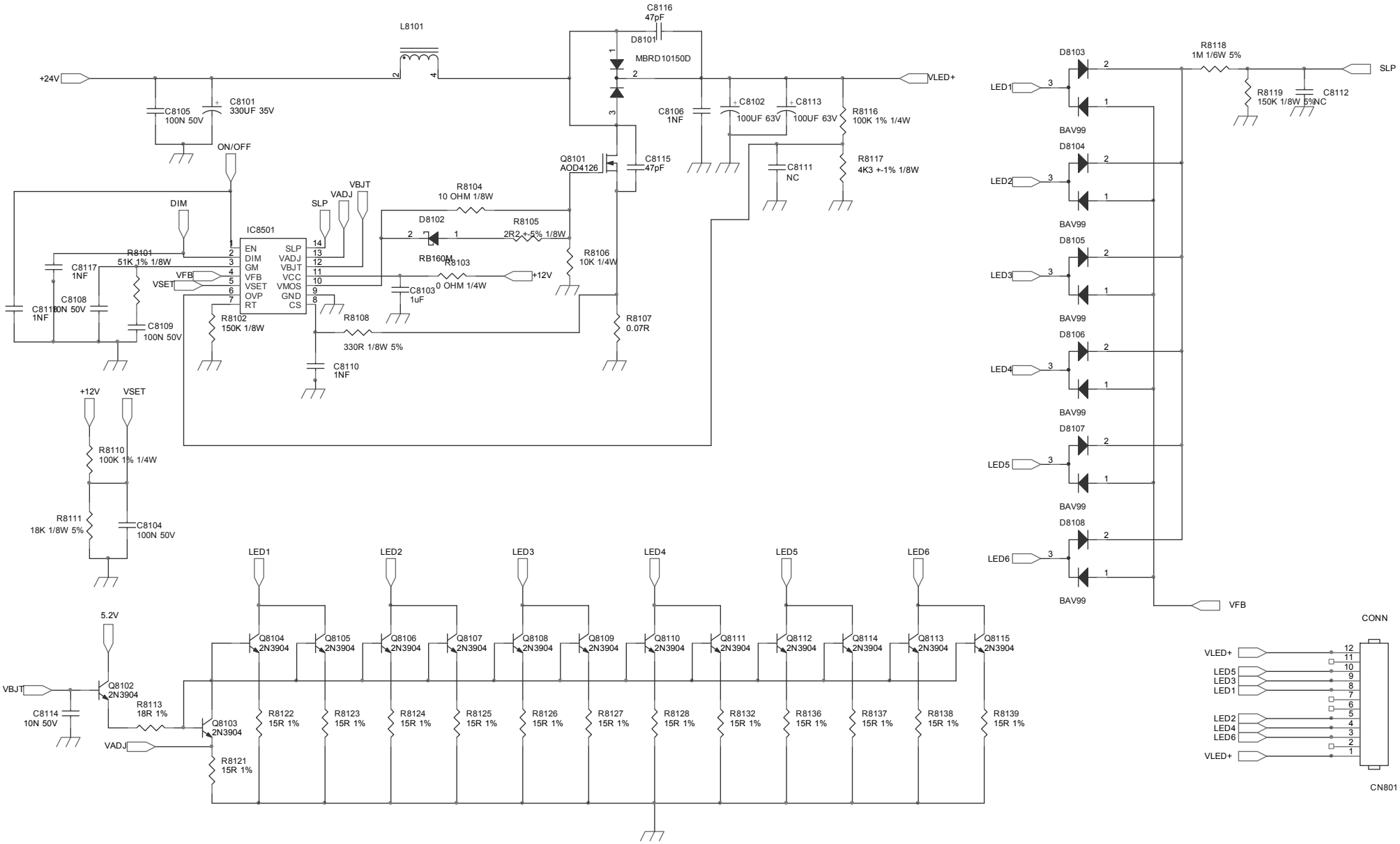
+24V
L8101
C8116
47pF
D8101
MBRD10150D
VLED+
C8105
100N 50V
C8101
330UF 35V
ON/OFF
C8106
1NF
C8102
100UF 63V
C8113
100UF 63V
R8116
100K 1% 1/4W
Q8101
AOD4126
C8115
47pF
C8111
NC
R8117
4K3 +-1% 1/8W
DIM
SLP
VADJ
VBJT
R8104
10 OHM 1/8W
D8102
R8105
2R2 +-5% 1/8W
IC8501
EN
DIM
GM
VFB
VSET
OVP
RT
SLP
VADJ
VBJT
VCC
VMOS
GND
CS
R8101
51K 1% 1/8W
C8117
1NF
VFB
VSET
RB160M
R8103
0 OHM 1/4W
+12V
R8106
10K 1/4W
C8103
1uF
C8118
1NF
C8108
100N 50V
C8109
100N 50V
R8102
150K 1/8W
R8108
330R 1/8W 5%
R8107
0.07R
C8110
1NF
+12V
VSET
R8110
100K 1% 1/4W
R8111
18K 1/8W 5%
C8104
100N 50V
5.2V
VBJT
Q8102
2N3904
C8114
10N 50V
R8113
18R 1%
Q8103
2N3904
VADJ
R8121
15R 1%
LED1
LED2
LED3
LED4
LED5
LED6
Q8104 2N3904
Q8105 2N3904
Q8106 2N3904
Q8107 2N3904
Q8108 2N3904
Q8109 2N3904
Q8110 2N3904
Q8111 2N3904
Q8112 2N3904
Q8114 2N3904
Q8113 2N3904
Q8115 2N3904
R8122 15R 1%
R8123 15R 1%
R8124 15R 1%
R8125 15R 1%
R8126 15R 1%
R8127 15R 1%
R8128 15R 1%
R8132 15R 1%
R8136 15R 1%
R8137 15R 1%
R8138 15R 1%
R8139 15R 1%
D8103
D8104
D8105
D8106
D8107
D8108
BAV99
R8118
1M 1/6W 5%
R8119
150K 1/8W 5%
C8112
NC
SLP
VFB
CONN
VLED+
LED5
LED3
LED1
LED2
LED4
LED6
VLED+
CN801